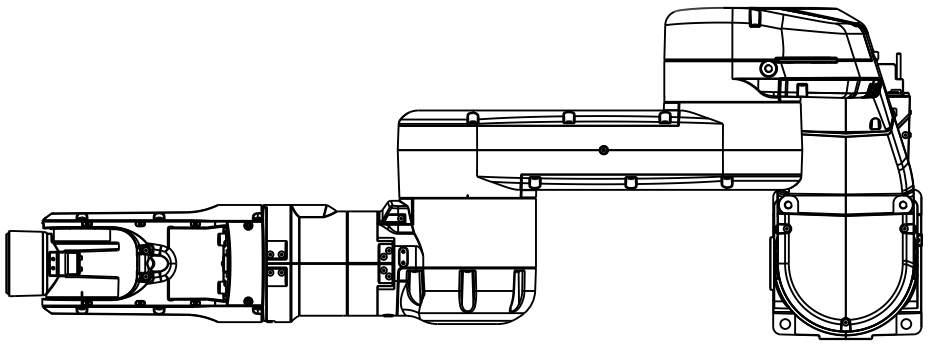

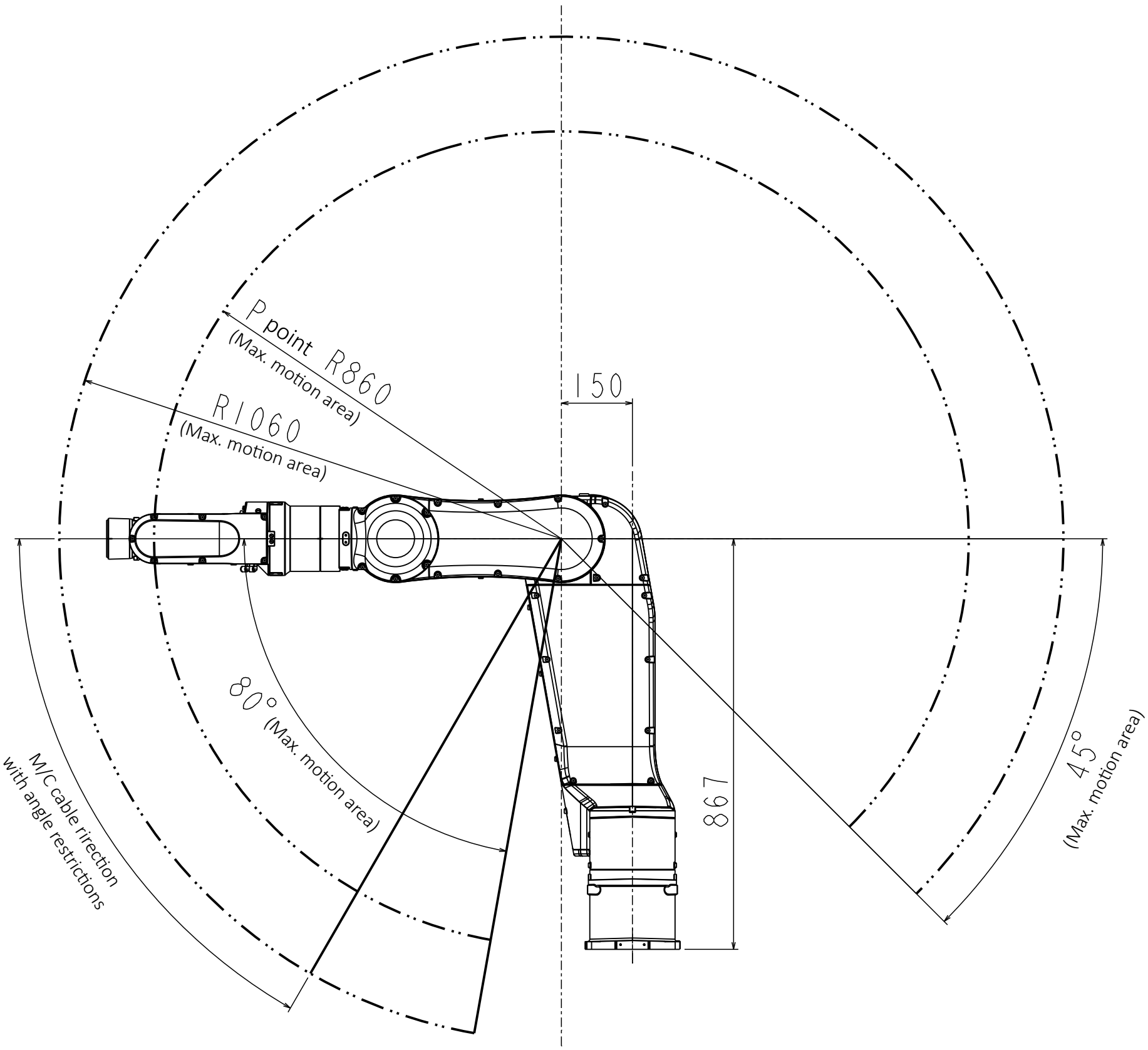
P point R860
(Max. motion area)
R1060
(Max. motion area)
150
80°
(Max. motion area)
M/C cable rirection
with angle restrictions
897
45°
(Max. motion area)