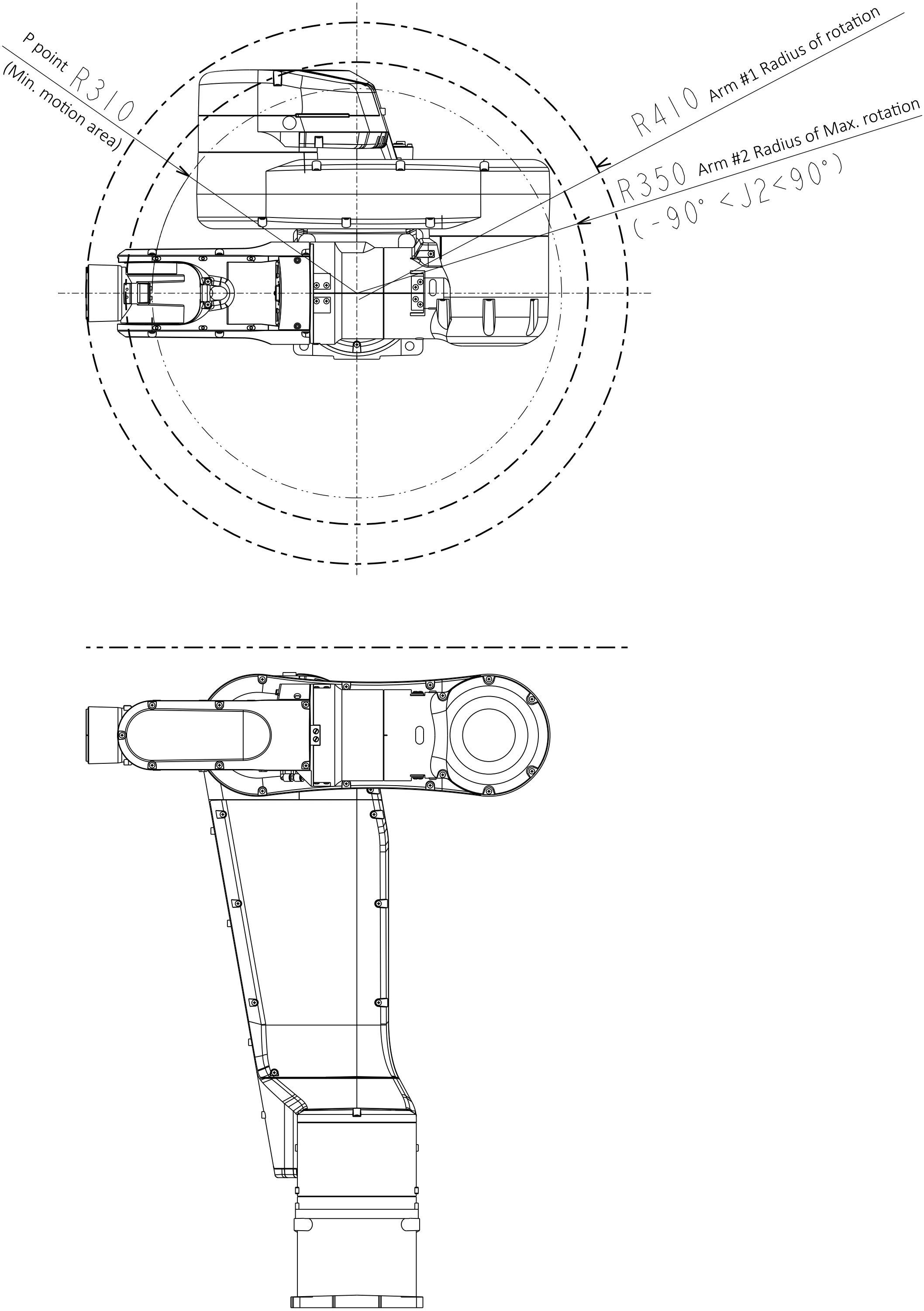
P point R310
(Min. motion area)
R410 Arm #1 Radius of rotation
R350 Arm #2 Radius of Max. rotation
(-90° < J2 < 90°)