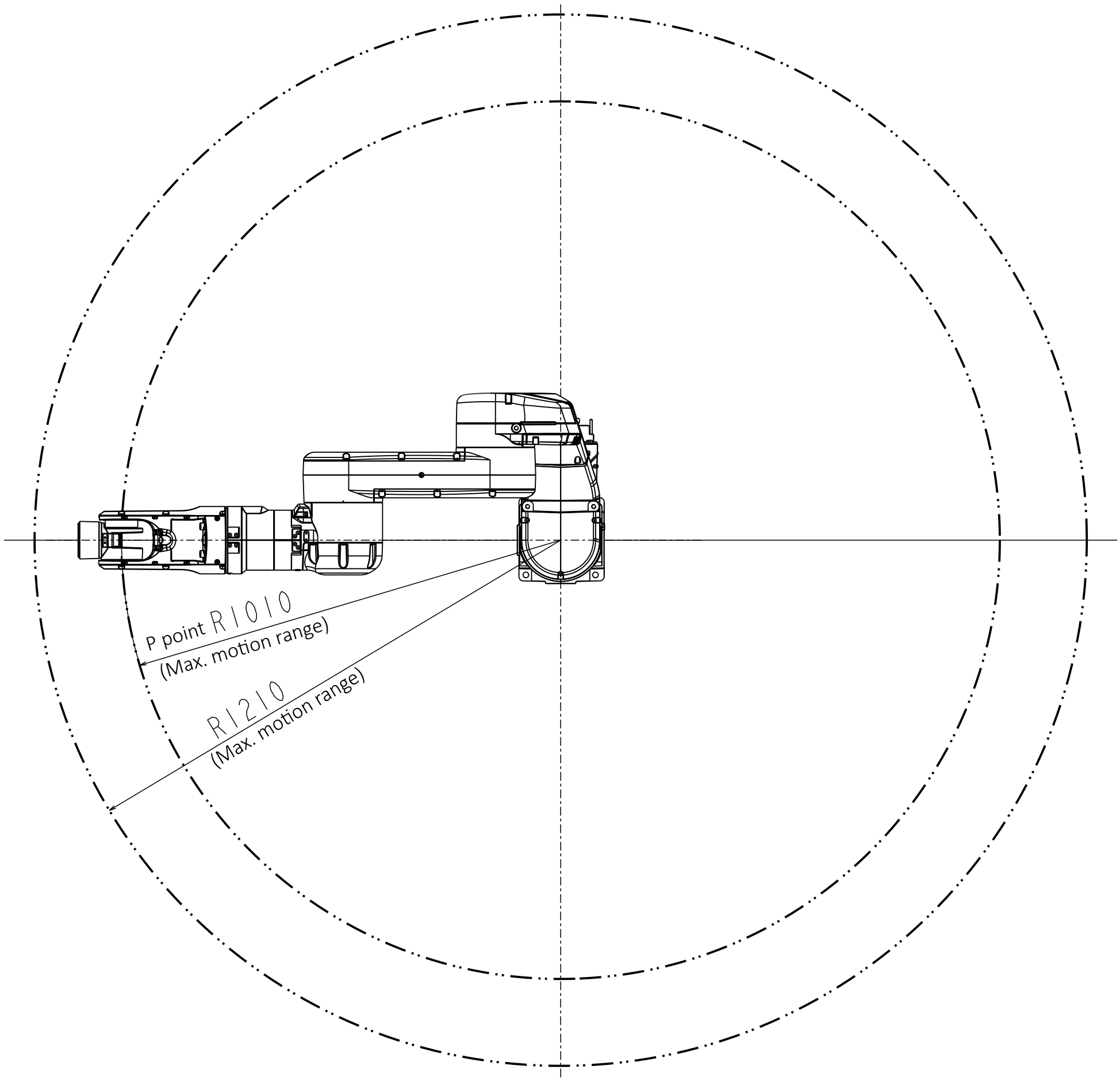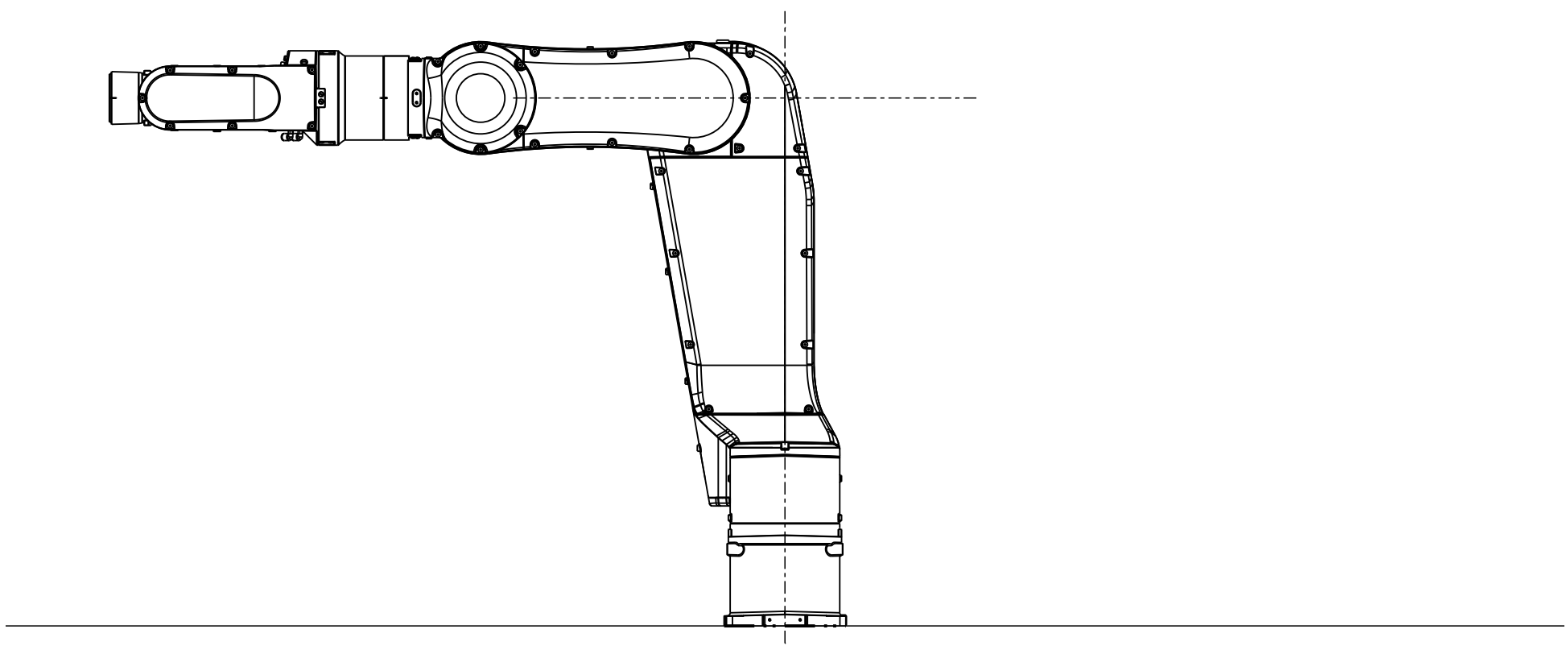
P point R1010
(Max. motion range)
R1210
(Max. motion range)